Aquatech Pressmain

Engineering Excellence and Innovation

MADE IN BRITAIN

AQUAMATIC AMV-FB

BOOSTER SET WITH STANDARD CONTROLS

AQUAMATIC AMV-FB

BOOSTER SET WITH STANDARD CONTROLS

OVERVIEW

The Aquamatic AMV-FB range of quality assured cold water pressure booster sets, is designed to increase the pressure of the cold/hot water services within a building where the existing incoming mains or feed tank is not capable of supplying sufficient system pressure. The range incorporates efficient inverter driven variable speed pumps, which continually vary the motor speed to match the changing flow demand pattern, whilst maintaining a constant system duty pressure.
This mode of operation, adjusting the pump's motor speed to the building's flow requirements, reduces the power consumption dramatically when compared to fixed speed motor control.

Our AMV-FB 2, 3 & 4 pump sets are manufactured to allow all of the pumps to run together if required. So pumps may be sized with or without a standby pump. All are programmed to run in staged cascade operation as the flow demand increases and similarly as demand decreases. All pumps are assembled on a common base frame with a consumer unit panel and all necessary valves and fittings to ensure ease of installation and efficient, reliable operation.

Features

- Energy Efficient Variable Speed Blueflux® motors exceed EuP IE4 grade
- Transducer Control for long term reliability and accuracy with hydraulic shock system protection
- Automatic Cascade Control for all pumps
- Electronic Low Water Cut-Out Interface for pump dry running protection, with auto re-start upon water restoration
- All components are WRAS approved
- 2 individual BMS Volt Free contacts per pump for run and trip condition
- Built to Latest CE Requirements and in accordance with ISO9001
- 304 Stainless steel pipework as standard
- Individual pump information LED indicator shows pump status: pump running, warning or alarm
- Integral flow-through control vessel (see right)

SPECIFICATION

Cold Water Pressure Booster Pump Set arranged for operation as duty pump with assist standby pump(s) all under efficient variable speed motor control via microprocessor control requiring single/three phase electrical supply (as appropriate - see below). Complete with interconnecting wiring and all necessary valves and fittings which form the suction and discharge manifolds. Manifold mounted flow-through control vessel.
All complete on a stainless steel base frame.

Designed, manufactured and tested in accordance with ISO9001 quality assurance procedures, using PED and WRAS approved components suitable for potable water specification. Compliant with all relevant European Community Directives as required by UK law and CE marked.

Automatic variable speed pump motor control for long term reliability and accurate pressure measurement by 392 transducer. Automatic alternations of all pumps to even run times. Sequential pump starting to avoid overloading electric supply. Motor overload protection. Electronic low water protection interface. Individual pump run and fault information LED display.

Run and trip volt free outputs available from all pumps.

Finish

Pump bodies are finished in electrophoresis coating. Panel is plastic. Stainless steel pipework is left unpainted for effect.

Control Pressure Vessel

To assist with the constant pressure controls a suitably sized WRAS flow-through design pressure vessel is provided complete with a flowjet combined isolating and drain valve.

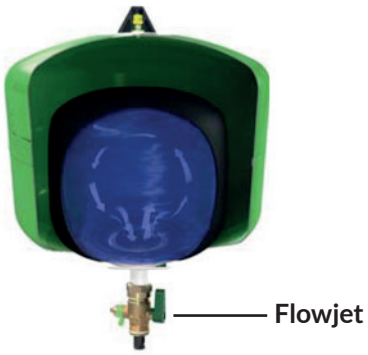

Flowjet - Flow through, shut-off and discharge valve

VARIABLE SPEED PUMPING PRINCIPLE

The basic concept is to alter the pump speed to match exactly the required demand of water to the system, using the principle that flow rate is directly proportional to pump speed. The electricity consumed by the pump motor is proportional to the cube of the pump speed. It can be shown (Fig. 1) that a 20% reduction in flow rate from the peak demand will reduce the power consumed by the motor by 50%. As the flow demand continues to decrease further savings in pump motor power consumption can be achieved.

Not only does this produce a saving in electricity consumption but it also provides other benefits such as reduced strain on the pumpset and system components by excessive pressure and water hammer, smoother and quieter operation through "ramped" acceleration and deceleration of the pump. Also constant pressure output is available where over-pressure could have an adverse effect on the system such as when refurbishing old buildings using the existing pipework or where calorifiers have a limited pressure rating.

FIG. 1

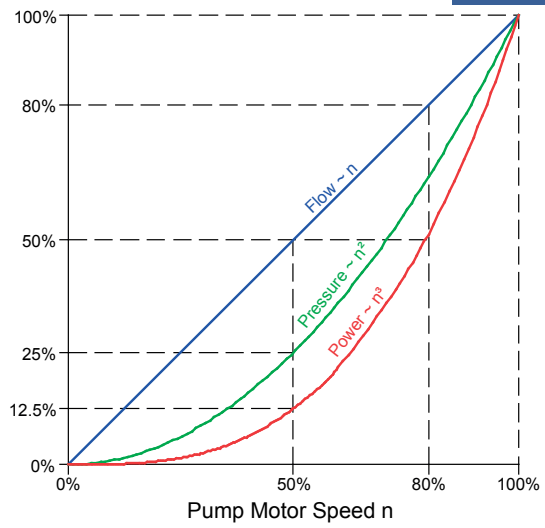

AMV-FB OPTIONAL FEATURES & ANCILLARIES

Pipework Material Options
We can supply pump sets with alternative pipe work materials such as; Galvanised, ABS, UPVC, 316 Stainless Steel or Copper. Please contact the sales team for further information.

Flexible Connections
Made from EPDM rubber and WRAS approved for potable water applications, this spherical bellows type flexible coupling joint will absorb pipe movements, isolate vibration, reduce system noise. Gaskets are not required and the joints are easily and speedily installed.

Anti Vibration Mountings
When fitted this turret type mount will isolate the pump package from the ground or floor-mounting surface. The mounting will arrest and reduce pump rotation starting inertia and associated vibration being transmitted through the ground or floor-mounting surface, which could potentially cause a noise problem.

GRP Weather Proof Enclosure
Where internal plant room space is at a premium or where a unit needs to be remotely located this fully encapsulated 25mm pre-insulated GRP enclosure may provide the ideal solution. It is supplied with an internal frost stat, heater, natural vents and access door with Yale lock.

Acoustic Attenuation Enclosure
Although the standard package meets stringent EC noise levels, this enclosure is specifically designed for noise sensitive applications. Typically an insertion loss of approximately 30dB(A) can be achieved in most applications. Enclosures are supplied complete with naturally ventilated acoustic louvres, removable panels for easy pump maintenance and glazed vision panel for viewing pump controls fascia.

Distribution Manifolds
Prefabricated with our proven in-house copper extrusion method. Can be assembled with any number of individual stabbings and combination of isolating, non-return, double check valve & water meters to suit the building installation requirements.

Aquavent
Designed to help assist with the draining down and refilling of pressure boosted water supply pipework by helping to prevent damaging pressure shocks from occurring. Whether a system pipework is drained down intentionally for maintenance or unintentionally as a result of the pressure booster set stopping, either by power interruption or a low water condition there is the potential of pressure shocks when the pressure booster restarts.

Fieldbus Protocol
Pumps can be fitted with the following communication cards: LON, Profibus, Modbus, GSM/GPRS & BACnet.

For further information relating to optional features, see data sheet 505.

Please feel free to discuss any special requirements with our sales team.

INDIVIDUAL PUMP SELECTION CURVES SERIES 2 & 4

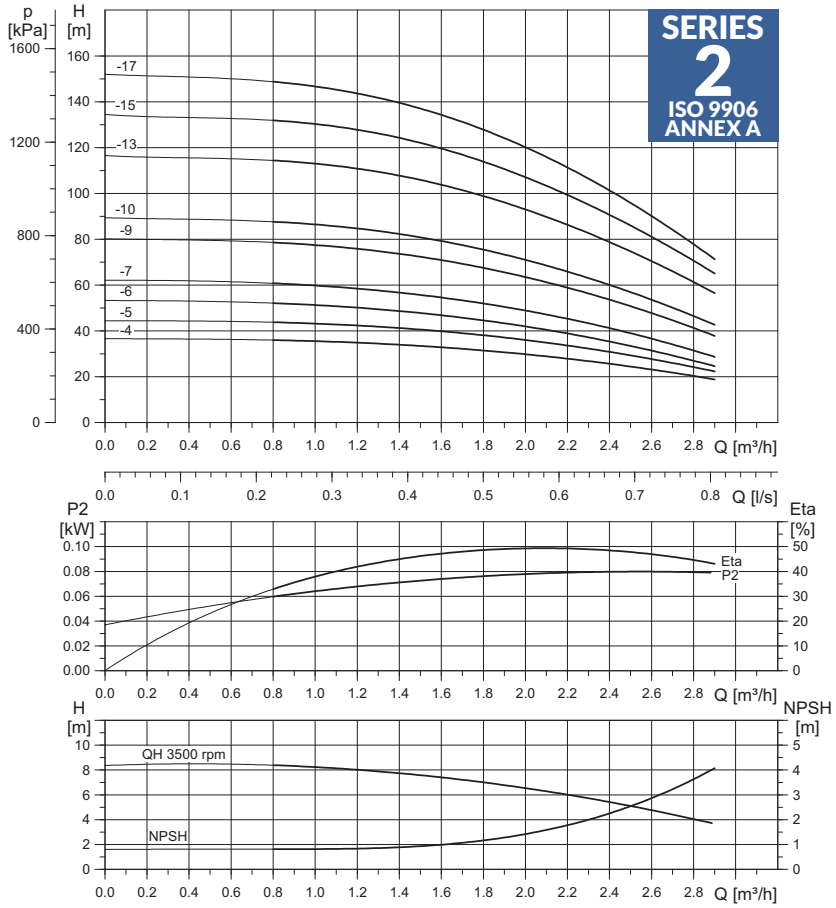

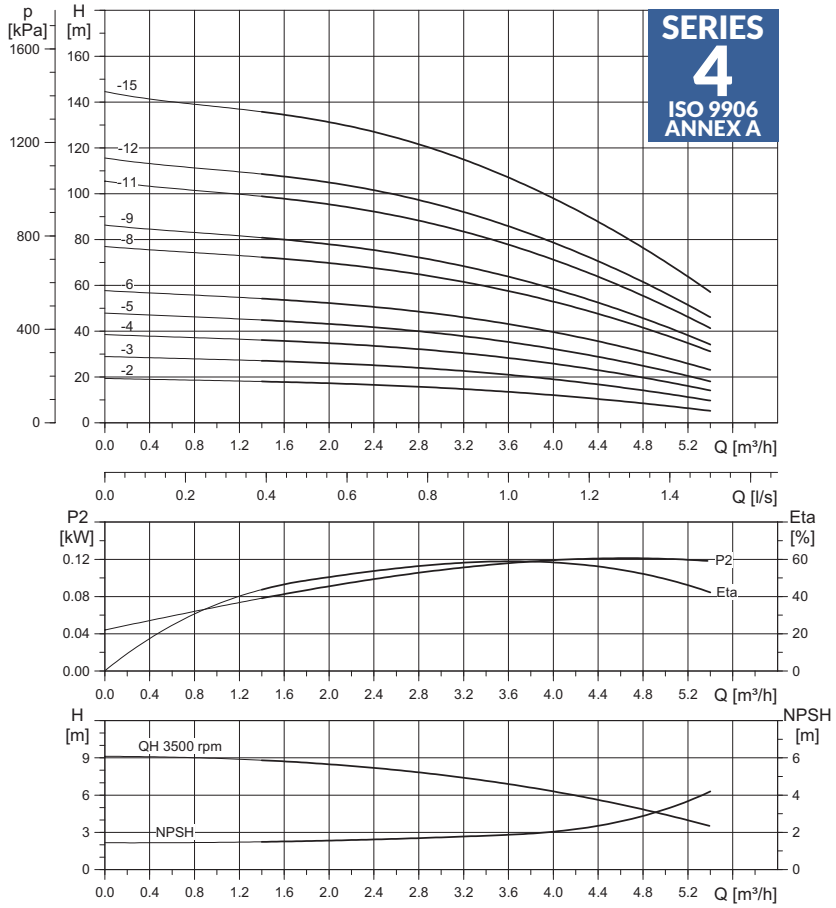

INDIVIDUAL PUMP SELECTION CURVES SERIES 6 & 12

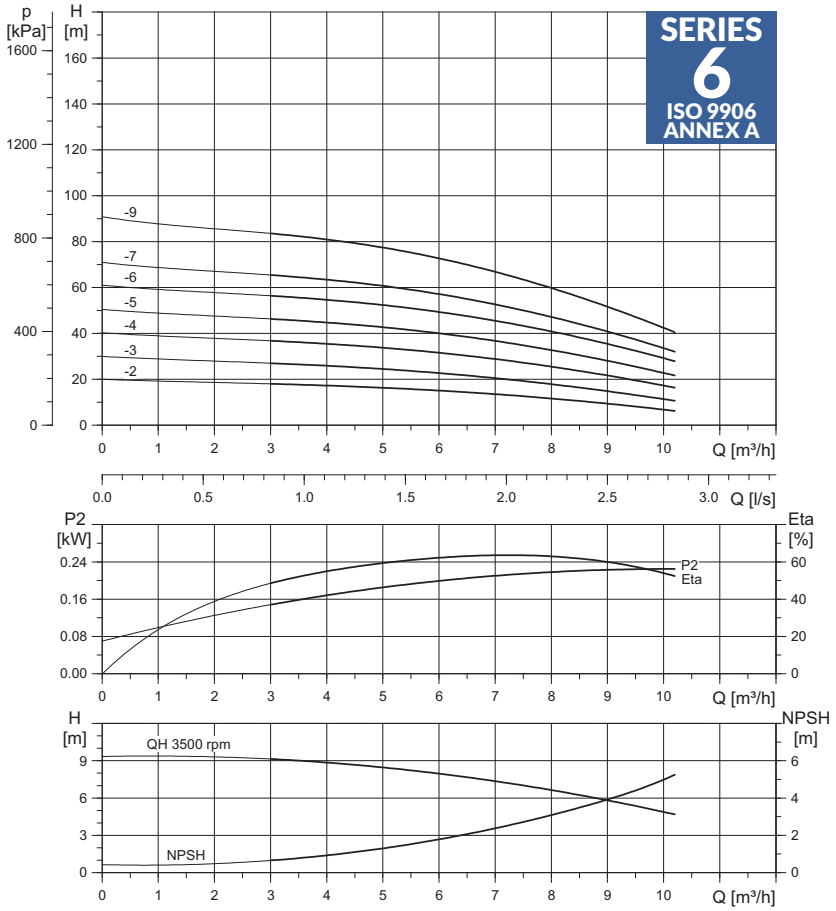

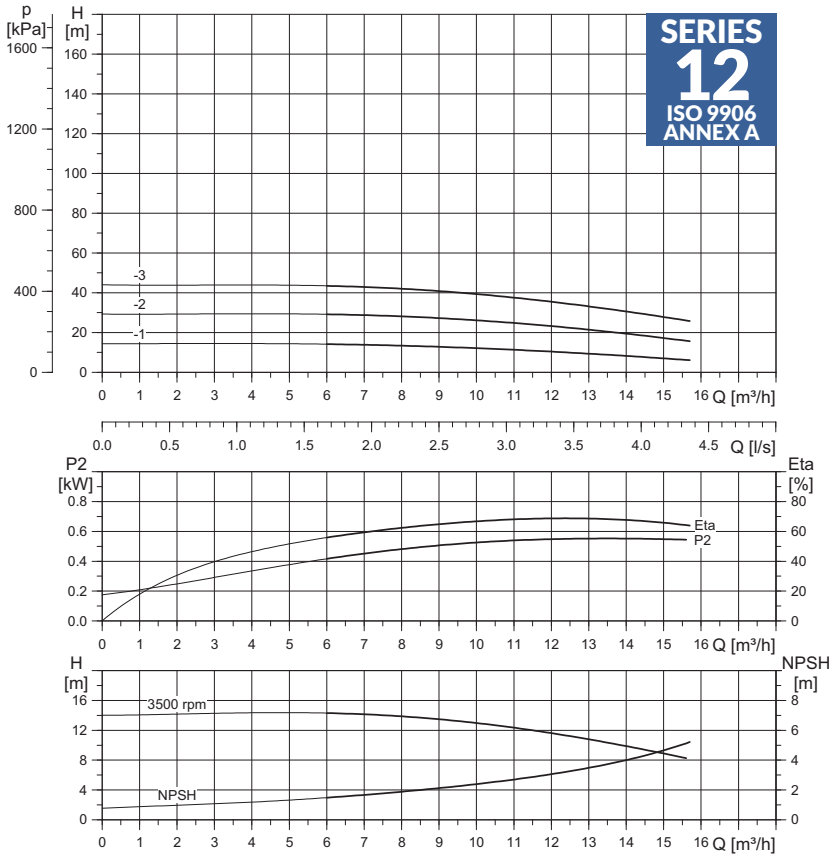

INDIVIDUAL PUMP SELECTION CURVES SERIES 18 & 24

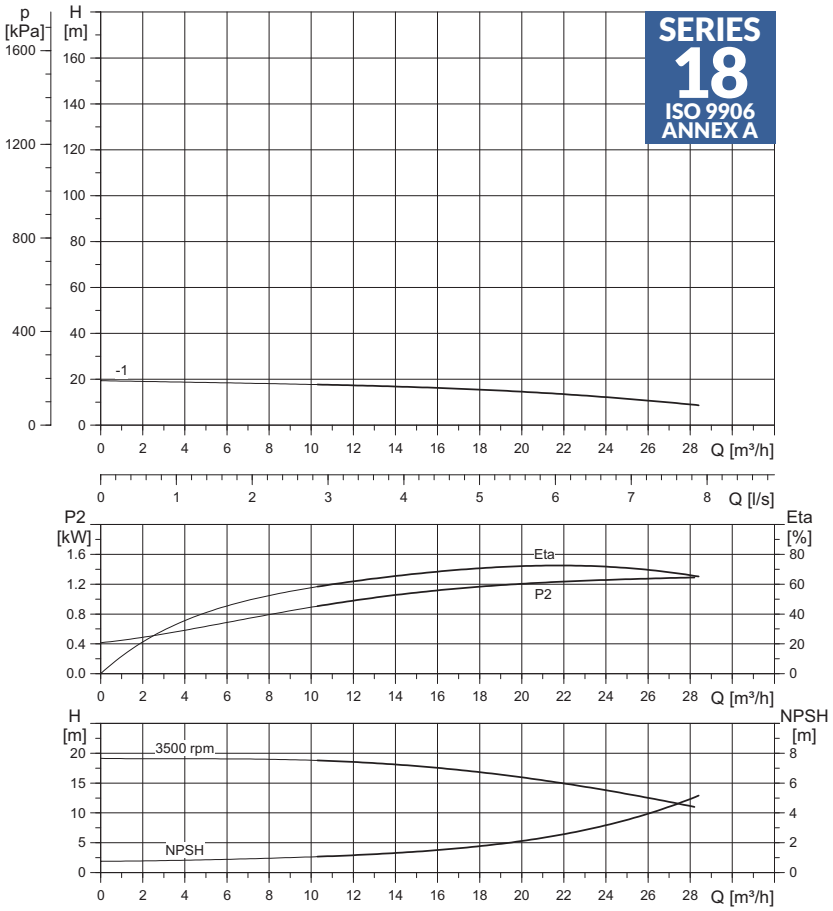

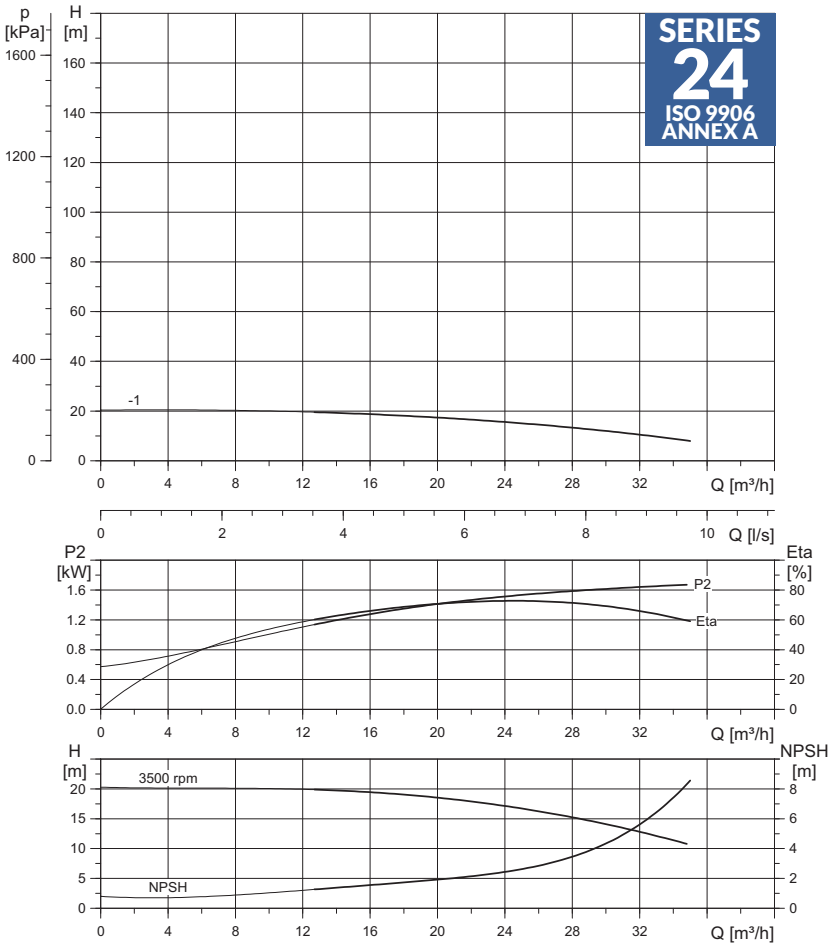

TWO PUMP MODEL 'AMV2-FB' DIMENSIONS

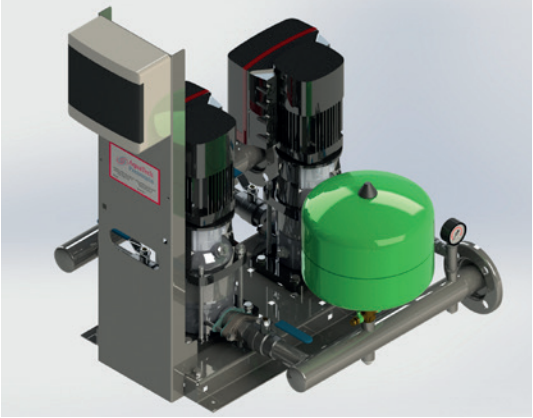

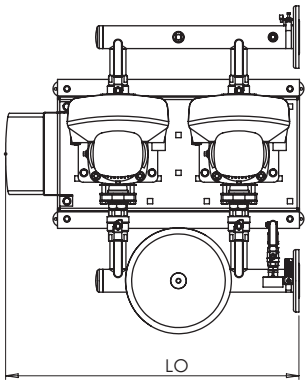

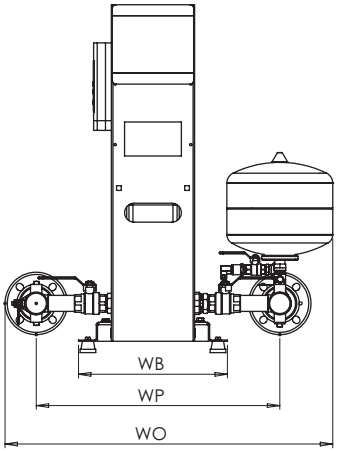

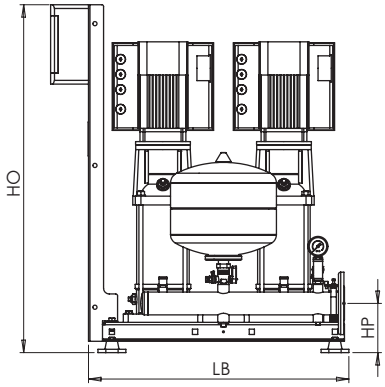

AQUAMATIC 'AMV2-FB' VARIABLE SPEED COLD WATER BOOSTER

PUMP TYPE	kW PER PUMP	FULL LOAD CURRENT 1Ph 240V AMPS	FULL LOAD CURRENT 3Ph 415V AMPS	TOTAL DRY WEIGHT OF UNIT (KG)	SOUND LEVEL dB(A)	BOOSTER SET DIMENSIONS [+/- 10mm]							FLANGE SIZE	VESSEL(S)	1 Ph 240V STOCKCODE	3 Ph 415V STOCKCODE	ETL RECLAIM MODEL NUMBER FOR EACH MOTOR 1PH 230V	ETL RECLAIM MODEL NUMBER FOR EACH MOTOR 3PH 400V
						LO	WO	HO	HP	LB	WB	WP						
2-4	0.37	4.6	1.6	106	58	640	960	890	100	690	400	655	DN50 PN16	1X 12 LTR	BWM-220104	BWM-240104	71A 1 H 0.37	71A 2 I 0.37
2-5	0.55	6.6	2.2	108	58	640	960	890	100	690	400	655	DN50 PN16	1X 12 LTR	BWM-220105	BWM-240105	71A 2 H 0.55	71A 2 I 0.55
2-6	0.55	6.6	2.2	108	58	640	960	890	100	690	400	655	DN50 PN16	1X 12 LTR	BWM-220106	BWM-240106	71A 2 H 0.55	71A 2 I 0.55
2-7	0.75	9	3	116	58	640	960	890	100	690	400	655	DN50 PN16	1X 12 LTR	BWM-220107	BWM-240107	80A 2 H 0.75	80A 2 I 0.75
2-9	0.75	9	3	116	58	640	960	890	100	690	400	655	DN50 PN16	1X 12 LTR	BWM-220109	BWM-240109	80A 2 H 0.75	80A 2 I 0.75
2-10	1.1	13	4.2	122	58	640	960	890	100	690	400	655	DN50 PN16	1X 12 LTR	BWM-220110	BWM-240110	80B 2 H 1.1	80B 2 I 1.1
2-13	1.1	13	4.2	122	58	640	960	890	100	690	400	655	DN50 PN16	1X 12 LTR	BWM-220113	BWM-240113	80B 2 H 1.1	80B 2 I 1.1
2-15	1.5	17.4	5.6	156	64	640	960	890	100	690	400	655	DN50 PN16	1X 12 LTR	BWM-220115	BWM-240115	90SC 2 H 1.5	90SC 2 I 1.5
2-17	1.5	17.4	5.6	156	64	640	960	890	100	690	400	655	DN50 PN16	1X 12 LTR	BWM-220117	BWM-240117	90SC 2 H 1.5	90SC 2 I 1.5
4-2	0.37	4.6	1.6	104	58	640	960	890	100	690	400	655	DN50 PN16	1X 12 LTR	BWM-220302	BWM-240302	71A 1 H 0.37	71A 2 I 0.37
4-3	0.55	6.6	2.2	106	58	640	960	890	100	690	400	655	DN50 PN16	1X 12 LTR	BWM-220303	BWM-240303	71A 2 H 0.55	71A 2 I 0.55
4-4	0.55	6.6	2.2	106	58	640	960	890	100	690	400	655	DN50 PN16	1X 12 LTR	BWM-220304	BWM-240304	71A 2 H 0.55	71A 2 I 0.55
4-5	0.75	9	3	112	58	640	960	890	100	690	400	655	DN50 PN16	1X 12 LTR	BWM-220305	BWM-240305	80A 2 H 0.75	80A 2 I 0.75
4-6	0.75	9	3	112	58	640	960	890	100	690	400	655	DN50 PN16	1X 12 LTR	BWM-220306	BWM-240306	80A 2 H 0.75	80A 2 I 0.75
4-8	1.1	13	4.2	118	58	640	960	890	100	690	400	655	DN50 PN16	1X 12 LTR	BWM-220308	BWM-240308	80B 2 H 1.1	80B 2 I 1.1
4-9	1.1	13	4.2	118	58	640	960	890	100	690	400	655	DN50 PN16	1X 12 LTR	BWM-220309	BWM-240309	80B 2 H 1.1	80B 2 I 1.1
4-11	1.5	17.4	5.6	152	64	640	960	890	100	690	400	655	DN50 PN16	1X 12 LTR	BWM-220311	BWM-240311	90SC 2 H 1.5	90SC 2 I 1.5
4-12	2.2	N/A	8	162	64	640	960	890	100	690	400	655	DN50 PN16	1X 12 LTR	N/A	BWM-240312	N/A	90LD 2 I 2.2
4-15	2.2	N/A	8	162	64	640	960	890	100	690	400	655	DN50 PN16	1X 12 LTR	N/A	BWM-240315	N/A	90LD 2 I 2.2
6-2	0.55	6.6	2.2	106	58	640	960	890	100	690	400	670	DN50 PN16	1X 12 LTR	BWM-220502	BWM-240502	71A 2 H 0.55	71A 2 I 0.55
6-3	1.1	13	4.2	116	58	640	960	890	100	690	400	670	DN50 PN16	1X 12 LTR	BWM-220503	BWM-240503	80B 2 H 1.1	80B 2 I 1.1
6-4	1.1	13	4.2	116	58	640	960	890	100	690	400	670	DN50 PN16	1X 12 LTR	BWM-220504	BWM-240504	80B 2 H 1.1	80B 2 I 1.1
6-5	1.5	17.4	5.6	148	64	640	960	890	100	690	400	670	DN50 PN16	1X 12 LTR	BWM-220505	BWM-240505	90SC 2 H 1.5	90SC 2 I 1.5
6-6	2.2	N/A	8	162	64	640	960	890	100	690	400	670	DN50 PN16	1X 12 LTR	N/A	BWM-240506	N/A	90LD 2 I 2.2
6-7	2.2	N/A	8	162	64	640	960	890	100	690	400	670	DN50 PN16	1X 12 LTR	N/A	BWM-240507	N/A	90LD 2 I 2.2
6-9	2.2	N/A	8	162	64	640	960	890	100	690	400	670	DN50 PN16	1X 12 LTR	N/A	BWM-240509	N/A	90LD 2 I 2.2
12-1	0.75	9	3	138	58	640	1025	890	130	690	400	705	DN80 PN16	2X 12 LTR	BWM-221001	BWM-241001	71A 1 H 0.37	71A 2 I 0.37
12-2	1.5	17.4	5.6	176	64	640	1025	890	130	690	400	705	DN80 PN16	2X 12 LTR	BWM-221002	BWM-241002	90SC 2 H 1.5	90SC 2 I 1.5
12-3	2.2	N/A	8.0	186	64	640	1025	890	130	690	400	705	DN80 PN16	2X 12 LTR	N/A	BWM-241003	N/A	80B 2 I 1.1
18-1	1.5	17.4	5.6	178	64	640	1025	890	140	690	400	705	DN80 PN16	2X 12 LTR	BWM-221501	BWM-241501	80A 2 H 0.75	90SC 2 I 1.5
24-1	2.2	N/A	8	186	64	640	1025	890	140	690	400	705	DN80 PN16	2X 12 LTR	N/A	BWM-242001	N/A	71A 2 I 0.55

THREE PUMP MODEL 'AMV3-FB' DIMENSIONS

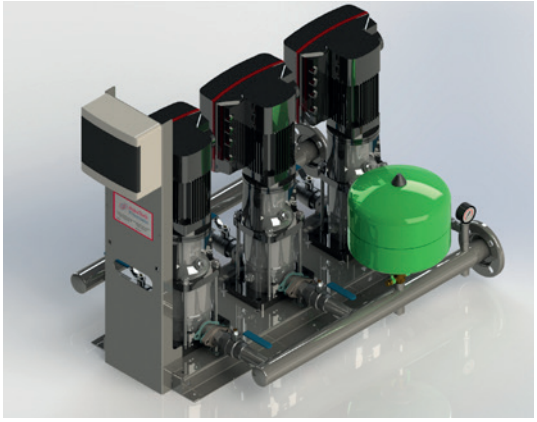

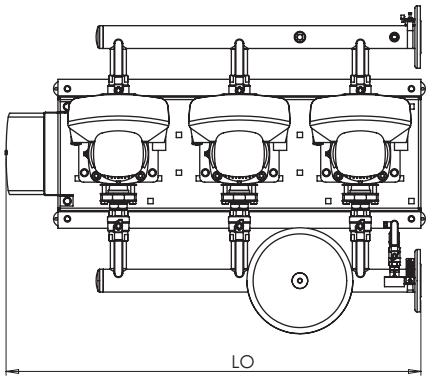

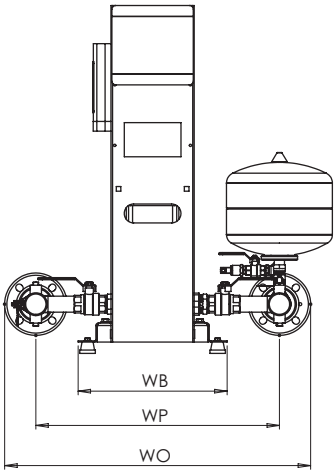

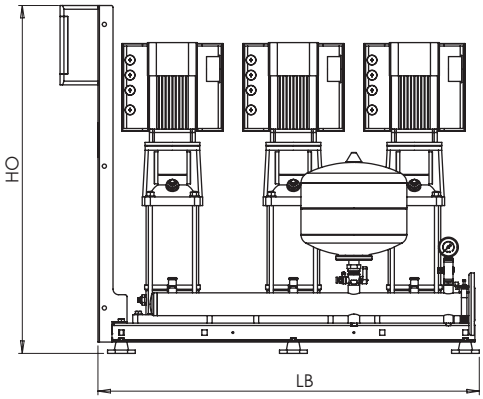

AQUAMATIC 'AMV3-FB' VARIABLE SPEED COLD WATER BOOSTER

PUMP TYPE	kW PER PUMP	FULL LOAD CURRENT 1Ph 240V AMPS	FULL LOAD CURRENT 3Ph 415V AMPS	TOTAL DRY WEIGHT OF UNIT (KG)	SOUND LEVEL dB(A)	BOOSTER SET DIMENSIONS [+/- 10mm]							FLANGE SIZE	VESSEL(S)	1 Ph 240V STOCKCODE	3 Ph 415V STOCKCODE	ETL RECLAIM MODEL NUMBER FOR EACH MOTOR 1PH 230V	ETL RECLAIM MODEL NUMBER FOR EACH MOTOR 3PH 400V
						LO	WO	HO	HP	LB	WB	WP						
2-4	0.37	6.9	2.4	137	58	960	960	890	100	1010	400	655	DN50 PN16	1X 12 LTR	BWM-320104	BWM-340104	71A 1 H 0.37	71A 2 I 0.37
2-5	0.55	9.9	3.3	140	58	960	960	890	100	1010	400	655	DN50 PN16	1X 12 LTR	BWM-320105	BWM-340105	71A 2 H 0.55	71A 2 I 0.55
2-6	0.55	9.9	3.3	140	58	960	960	890	100	1010	400	655	DN50 PN16	1X 12 LTR	BWM-320106	BWM-340106	71A 2 H 0.55	71A 2 I 0.55
2-7	0.75	13.5	4.5	152	58	960	960	890	100	1010	400	655	DN50 PN16	1X 12 LTR	BWM-320107	BWM-340107	80A 2 H 0.75	80A 2 I 0.75
2-9	0.75	13.5	4.5	152	58	960	960	890	100	1010	400	655	DN50 PN16	1X 12 LTR	BWM-320109	BWM-340109	80A 2 H 0.75	80A 2 I 0.75
2-10	1.1	19.5	6.3	161	58	960	960	890	100	1010	400	655	DN50 PN16	1X 12 LTR	BWM-320110	BWM-340110	80B 2 H 1.1	80B 2 I 1.1
2-13	1.1	19.5	6.3	161	58	960	960	890	100	1010	400	655	DN50 PN16	1X 12 LTR	BWM-320113	BWM-340113	80B 2 H 1.1	80B 2 I 1.1
2-15	1.5	26.1	8.4	212	64	960	960	890	100	1010	400	655	DN50 PN16	1X 12 LTR	BWM-320115	BWM-340115	90SC 2 H 1.5	90SC 2 I 1.5
2-17	1.5	26.1	8.4	212	64	960	960	890	100	1010	400	655	DN50 PN16	1X 12 LTR	BWM-320117	BWM-340117	90SC 2 H 1.5	90SC 2 I 1.5
4-2	0.37	6.9	2.4	134	58	960	960	890	100	1010	400	655	DN50 PN16	1X 12 LTR	BWM-320302	BWM-340302	71A 1 H 0.37	71A 2 I 0.37
4-3	0.55	9.9	3.3	137	58	960	960	890	100	1010	400	655	DN50 PN16	1X 12 LTR	BWM-320303	BWM-340303	71A 2 H 0.55	71A 2 I 0.55
4-4	0.55	9.9	3.3	137	58	960	960	890	100	1010	400	655	DN50 PN16	1X 12 LTR	BWM-320304	BWM-340304	71A 2 H 0.55	71A 2 I 0.55
4-5	0.75	13.5	4.5	146	58	960	960	890	100	1010	400	655	DN50 PN16	1X 12 LTR	BWM-320305	BWM-340305	80A 2 H 0.75	80A 2 I 0.75
4-6	0.75	13.5	4.5	146	58	960	960	890	100	1010	400	655	DN50 PN16	1X 12 LTR	BWM-320306	BWM-340306	80A 2 H 0.75	80A 2 I 0.75
4-8	1.1	19.5	6.3	155	58	960	960	890	100	1010	400	655	DN50 PN16	1X 12 LTR	BWM-220308	BWM-240308	80B 2 H 1.1	80B 2 I 1.1
4-9	1.1	19.5	6.3	155	58	960	960	890	100	1010	400	655	DN50 PN16	1X 12 LTR	BWM-220309	BWM-240309	80B 2 H 1.1	80B 2 I 1.1
4-11	1.5	26.1	8.4	206	64	960	960	890	100	1010	400	655	DN50 PN16	1X 12 LTR	BWM-320311	BWM-340311	90SC 2 H 1.5	90SC 2 I 1.5
4-12	2.2	N/A	12	239	64	960	960	890	100	1010	400	655	DN50 PN16	1X 12 LTR	N/A	BWM-340312	N/A	90LD 2 I 2.2
4-15	2.2	N/A	12	239	64	960	960	890	100	1010	400	655	DN50 PN16	1X 12 LTR	N/A	BWM-340315	N/A	90LD 2 I 2.2
6-2	0.55	9.9	3.3	137	58	960	960	890	100	1010	400	670	DN50 PN16	1X 12 LTR	BWM-320502	BWM-340502	71A 2 H 0.55	71A 2 I 0.55
6-3	1.1	19.5	6.3	152	58	960	960	890	100	1010	400	670	DN50 PN16	1X 12 LTR	BWM-320503	BWM-340503	80B 2 H 1.1	80B 2 I 1.1
6-4	1.1	19.5	6.3	152	58	960	960	890	100	1010	400	670	DN50 PN16	1X 12 LTR	BWM-320504	BWM-340504	80B 2 H 1.1	80B 2 I 1.1
6-5	1.5	26.1	8.4	200	64	960	960	890	100	1010	400	670	DN50 PN16	1X 12 LTR	BWM-320505	BWM-340505	90SC 2 H 1.5	90SC 2 I 1.5
6-6	2.2	N/A	12	221	64	960	960	890	100	1010	400	670	DN50 PN16	1X 12 LTR	N/A	BWM-340506	N/A	90LD 2 I 2.2
6-7	2.2	N/A	12	221	64	960	960	890	100	1010	400	670	DN50 PN16	1X 12 LTR	N/A	BWM-340507	N/A	90LD 2 I 2.2
6-9	2.2	N/A	12	221	64	960	960	890	100	1010	400	670	DN50 PN16	1X 12 LTR	N/A	BWM-340509	N/A	90LD 2 I 2.2
12-1	0.75	13.5	4.5	182	58	960	1040	890	130	1010	400	705	DN100 PN16	2X 12 LTR	BWM-321001	BWM-341001	71A 1 H 0.37	71A 2 I 0.37
12-2	1.5	26.1	8.4	239	64	960	1040	890	130	1010	400	705	DN100 PN16	2X 12 LTR	BWM-321002	BWM-341002	90SC 2 H 1.5	90SC 2 I 1.5
12-3	2.2	N/A	12.0	254	64	960	1040	890	130	1010	400	705	DN100 PN16	2X 12 LTR	N/A	BWM-341003	N/A	80B 2 I 1.1
18-1	1.5	26.1	8.4	242	64	960	1040	890	140	1010	400	705	DN100 PN16	2X 12 LTR	BWM-321501	BWM-341501	80A 2 H 0.75	90SC 2 I 1.5
24-1	2.2	N/A	12	254	64	960	1040	890	140	1010	400	705	DN100 PN16	2X 12 LTR	N/A	BWM-342001	N/A	71A 2 I 0.55

FOUR PUMP MODEL 'AMV4-FB' DIMENSIONS

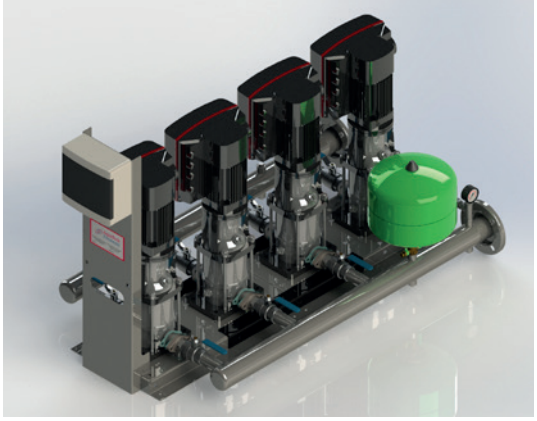

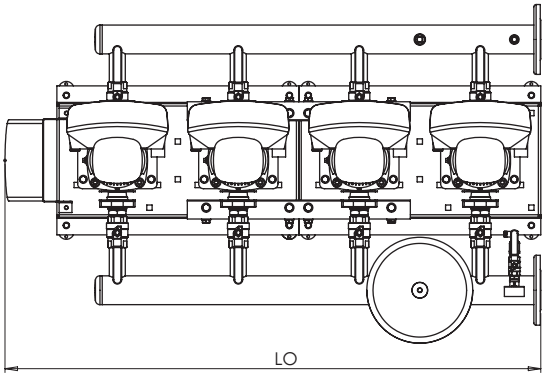

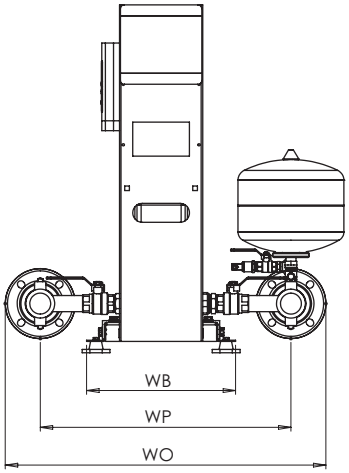

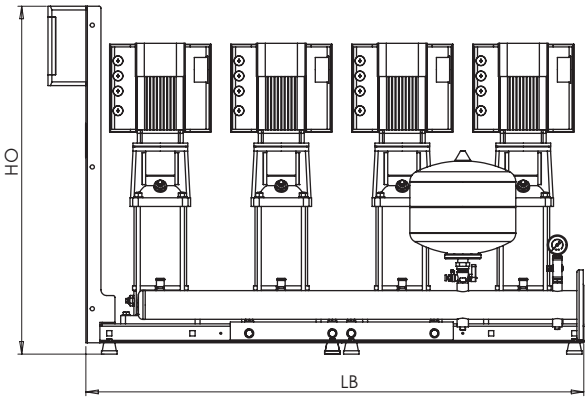

AQUAMATIC 'AMV4-FB' VARIABLE SPEED COLD WATER BOOSTER

PUMP TYPE	kW PER PUMP	FULL LOAD CURRENT 1Ph 240V AMPS	FULL LOAD CURRENT 3Ph 415V AMPS	TOTAL DRY WEIGHT OF UNIT (KG)	SOUND LEVEL dB(A)	BOOSTER SET DIMENSIONS [+/- 10mm]							FLANGE SIZE	VESSEL(S)	1 Ph 240V STOCKCODE	3 Ph 415V STOCKCODE	ETL RECLAIM MODEL NUMBER FOR EACH MOTOR 1PH 230V	ETL RECLAIM MODEL NUMBER FOR EACH MOTOR 3PH 400V
						LO	WO	HO	HP	LB	WB	WP						
2-4	0.37	9.2	3.2	168	58	1280	970	890	100	1330	400	655	DN65 PN16	1X 12 LTR	BWM-420104	BWM-440104	71A 1 H 0.37	71A 2 I 0.37
2-5	0.55	13.2	4.4	172	58	1280	970	890	100	1330	400	655	DN65 PN16	1X 12 LTR	BWM-420105	BWM-440105	71A 2 H 0.55	71A 2 I 0.55
2-6	0.55	13.2	4.4	172	58	1280	970	890	100	1330	400	655	DN65 PN16	1X 12 LTR	BWM-420106	BWM-440106	71A 2 H 0.55	71A 2 I 0.55
2-7	0.75	18	6	188	58	1280	970	890	100	1330	400	655	DN65 PN16	1X 12 LTR	BWM-420107	BWM-440107	80A 2 H 0.75	80A 2 I 0.75
2-9	0.75	18	6	188	58	1280	970	890	100	1330	400	655	DN65 PN16	1X 12 LTR	BWM-420109	BWM-440109	80A 2 H 0.75	80A 2 I 0.75
2-10	1.1	26	8.4	200	58	1280	970	890	100	1330	400	655	DN65 PN16	1X 12 LTR	BWM-420110	BWM-440110	80B 2 H 1.1	80B 2 I 1.1
2-13	1.1	26	8.4	200	58	1280	970	890	100	1330	400	655	DN65 PN16	1X 12 LTR	BWM-420113	BWM-440113	80B 2 H 1.1	80B 2 I 1.1
2-15	1.5	34.8	11.2	268	64	1280	970	890	100	1330	400	655	DN65 PN16	1X 12 LTR	BWM-420115	BWM-440115	90SC 2 H 1.5	90SC 2 I 1.5
2-17	1.5	34.8	11.2	268	64	1280	970	890	100	1330	400	655	DN65 PN16	1X 12 LTR	BWM-420117	BWM-440117	90SC 2 H 1.5	90SC 2 I 1.5
4-2	0.37	9.2	3.2	164	58	1280	970	890	100	1330	400	655	DN65 PN16	1X 12 LTR	BWM-420302	BWM-440302	71A 1 H 0.37	71A 2 I 0.37
4-3	0.55	13.2	4.4	168	58	1280	970	890	100	1330	400	655	DN65 PN16	1X 12 LTR	BWM-420303	BWM-440303	71A 2 H 0.55	71A 2 I 0.55
4-4	0.55	13.2	4.4	168	58	1280	970	890	100	1330	400	655	DN65 PN16	1X 12 LTR	BWM-420304	BWM-440304	71A 2 H 0.55	71A 2 I 0.55
4-5	0.75	18	6	180	58	1280	970	890	100	1330	400	655	DN65 PN16	1X 12 LTR	BWM-420305	BWM-440305	80A 2 H 0.75	80A 2 I 0.75
4-6	0.75	18	6	180	58	1280	970	890	100	1330	400	655	DN65 PN16	1X 12 LTR	BWM-420306	BWM-440306	80A 2 H 0.75	80A 2 I 0.75
4-8	1.1	26	8.4	192	58	1280	970	890	100	1330	400	655	DN65 PN16	1X 12 LTR	BWM-420308	BWM-440308	80B 2 H 1.1	80B 2 I 1.1
4-9	1.1	26	8.4	192	58	1280	970	890	100	1330	400	655	DN65 PN16	1X 12 LTR	BWM-420309	BWM-440309	80B 2 H 1.1	80B 2 I 1.1
4-11	1.5	34.8	11.2	260	64	1280	970	890	100	1330	400	655	DN65 PN16	1X 12 LTR	BWM-420311	BWM-440311	90SC 2 H 1.5	90SC 2 I 1.5
4-12	2.2	N/A	16	306	64	1280	970	890	100	1330	400	655	DN65 PN16	1X 12 LTR	N/A	BWM-440312	N/A	90LD 2 I 2.2
4-15	2.2	N/A	16	306	64	1280	970	890	100	1330	400	655	DN65 PN16	1X 12 LTR	N/A	BWM-440315	N/A	90LD 2 I 2.2
6-2	0.55	13.2	4.4	168	58	1280	970	890	100	1330	400	670	DN65 PN16	1X 12 LTR	BWM-420502	BWM-440502	71A 2 H 0.55	71A 2 I 0.55
6-3	1.1	26	8.4	188	58	1280	970	890	100	1330	400	670	DN65 PN16	1X 12 LTR	BWM-420503	BWM-440503	80B 2 H 1.1	80B 2 I 1.1
6-4	1.1	26	8.4	188	58	1280	970	890	100	1330	400	670	DN65 PN16	1X 12 LTR	BWM-420504	BWM-440504	80B 2 H 1.1	80B 2 I 1.1
6-5	1.5	34.8	11.2	252	64	1280	970	890	100	1330	400	670	DN65 PN16	1X 12 LTR	BWM-420505	BWM-440505	90SC 2 H 1.5	90SC 2 I 1.5
6-6	2.2	N/A	16	280	64	1280	970	890	100	1330	400	670	DN65 PN16	1X 12 LTR	N/A	BWM-440506	N/A	90LD 2 I 2.2
6-7	2.2	N/A	16	280	64	1280	970	890	100	1330	400	670	DN65 PN16	1X 12 LTR	N/A	BWM-440507	N/A	90LD 2 I 2.2
6-9	2.2	N/A	16	280	64	1280	970	890	100	1330	400	670	DN65 PN16	1X 12 LTR	N/A	BWM-440509	N/A	90LD 2 I 2.2
											1280							
12-1	0.75	18	6	226	58	1280	1040	890	130	1330	400	705	DN100 PN16	2X 12 LTR	BWM-421001	BWM-441001	71A 1 H 0.37	71A 2 I 0.37
12-2	1.5	34.8	11.2	302	64	1280	1040	890	130	1330	400	705	DN100 PN16	2X 12 LTR	BWM-421002	BWM-441002	90SC 2 H 1.5	90SC 2 I 1.5
12-3	2.2	N/A	16.0	322	64	1280	1040	890	130	1330	400	705	DN100 PN16	2X 12 LTR	N/A	BWM-441003	N/A	80B 2 I 1.1
18-1	1.5	34.8	11.2	306	64	1280	1040	890	140	1330	400	705	DN100 PN16	2X 12 LTR	BWM-421501	BWM-441501	80A 2 H 0.75	90SC 2 I 1.5
24-1	2.2	N/A	16	322	64	1280	1040	890	140	1330	400	705	DN100 PN16	2X 12 LTR	N/A	BWM-442001	N/A	71A 2 I 0.55

AQUAMATIC 'AMV' SERIES INSTALLATION GUIDANCE NOTES

ELECTRICAL

Units are designed for a 240 volt AC 1Phase 50Hz electrical supply for motors up to 1.5 kW and 415 volt AC 3phase 50 Hz electrical supply for motors above 1.5 kW. Electrical design and equipment conforms to BSEN 60204-1-1993 regulations, it is important that all subsequent wiring and protection equipment reflects this.

HYDRAULIC

The design of this unit enables it to be located in any position in a plant room with the minimum of inconvenience to pipework layout. Installer to fit isolating valves on break tank supply and riser to system. Note: Additional check valve/s should not be fitted on the suction or discharge pipework.

MECHANICAL

The unit should be mounted on a flat, slightly raised plinth and bolted down. AquaTech Pressmain recommend that when the unit is installed adequate room for servicing access is left around the unit. A gap of around 500mm is preferable. The selected pumps are designed for quiet operation and are virtually vibration free.

Typical pipework arrangement

using variable speed cold water pressure booster set feeding hot & cold water services.

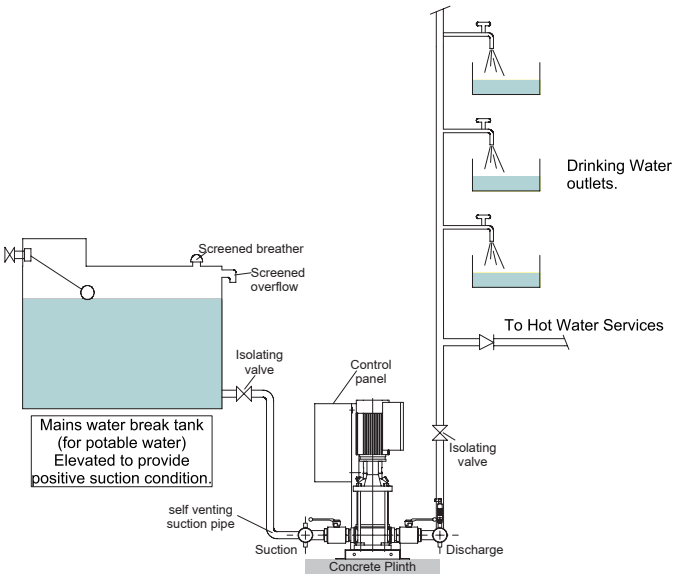

COMMISSIONING

Following electrical, hydraulic and mechanical installations as above, all units should be commissioned by AquaTech Pressmain service team.

CONSTRUCTION STANDARDS FOR AMV PRESSURE BOOSTER SETS

COMPONENT	MODEL/SERIES	STANDARDS/CLASS	REMARKS
Pumps	2 to 24	Vertical Multi-stage	WRAS Approved
Mechanical Seal	Carbon / Ceramic	DIN 24960	WRAS Approved
Motor for Pumps	TEFC	IP55, Class F Insulation	EuP Ready / Blueflux
Isolating & Non Return Valves	Ball Valve	PTFE Ball Seat	WRAS Approved
Suction & Discharge Manifolds	Stainless Steel EN1057 (304)	Entire unit WRAS Approved	Approval Number 0710086
Control Panels	CUI	IP55, BSEN 60204 part1:1998 89/3366/eec	CE Marked
Microprocessor	MGE Integral Drive	EN61800-5-1 / EN60034	CE Marked
Hydraulic Accumulators	Flow through	PED 9723EC	WRAS Approved
Quality System	ISO 9001	BSI Registered	CERT No. FM33090

Aquatech Pressmain

AGM House, London Road, Copford, Colchester CO6 1GT
T: +44 (0)1206 215121 **E:** info@aquatechpressmain.co.uk **www.aquatechpressmain.co.uk**

Datasheet No: 128 Issue No: 5 Date: 01/07/22